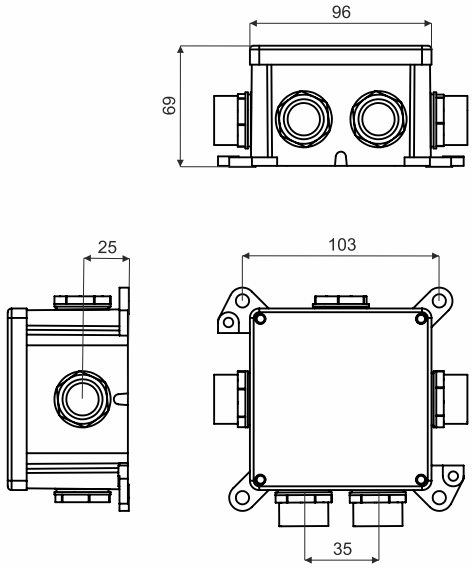

product description:

designed for distribution system with voltage 500 V and with maximum current 16 A
boxes for piping with steel threaded or metal flexible pipes
four glands and one plug evenly distributed on the sides of the box
for installation in TNC networks
to install on materials with fire classes E or F, use thermally insulating pad
dimension: 96x96x64 mm

material: aluminum
temperature resistance: -25 - +70 °C
fire class for underlying material: A1-D
protection types: IP 54
weight: 575 g
mechanical protection according to EN 50102: IK10
meets the requirements: ČSN EN 60670-1, ČSN EN IEC 60670-1 ed. 2:21
storage: EN 60721-3-1

7216 C_P16 - glands for threaded pipes P16; 12 pcs of boxes in carton
7216 C_M20 - glands for threaded pipes M20; 12 pcs of boxes in carton

accessories:

screwless terminal plates TYP015, TYP016, TYP017, TYP018
sealing cork P-16

recycling symbols:

41 ALU box

40 FE screws

21 PAP cardboard

WARNING

risks associated with using the products:

incorrect electrical installation can cause a fire - we recommend the connection to be carried out exclusively by an authorized person

follow the manufacturer's installation instructions according to the installation instructions and videos

damage to the product - if the box is visibly damaged, stop using it

under normal and foreseeable conditions of use, the installed box does not pose any risks to consumers